DATA SHEET

Hose Reel Stand

Dixon's hose reel stand provides a free standing installation option for Dixon's fixed fire hose reel and wash down hose reel ranges. The stand features a universal mounting plate design which also accommodates the fitment of other brands of fire hose reels with industry standard mounting brackets.

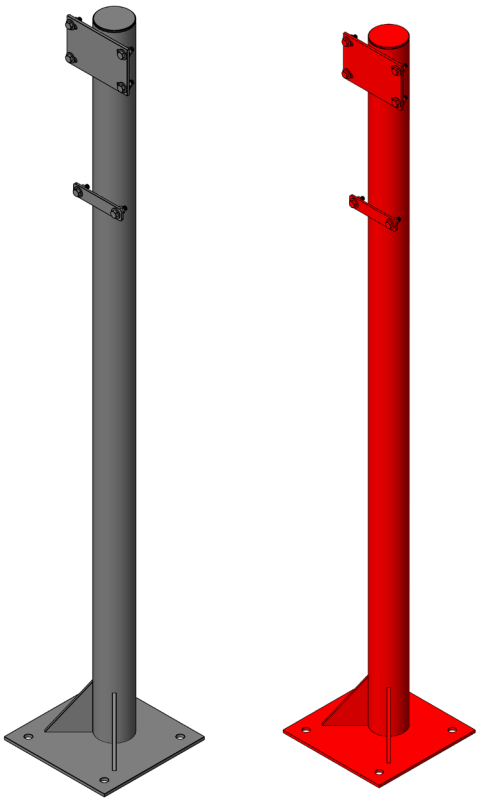

Specifications

- Heavy duty welded steel construction
- Available in two finish options:
  - Galvanised steel
  - Painted signal red
- Flat base - 4mm plate - with four pre-drilled bolt holes. Suits M12 fixings (not included)
- Mounting plate with slotted bolt holes to allow universal fitment of other brands
- Includes galvanised nuts, bolts and washers for the mounting bracket
- Stand height: 1560mm
- Weight 15kg

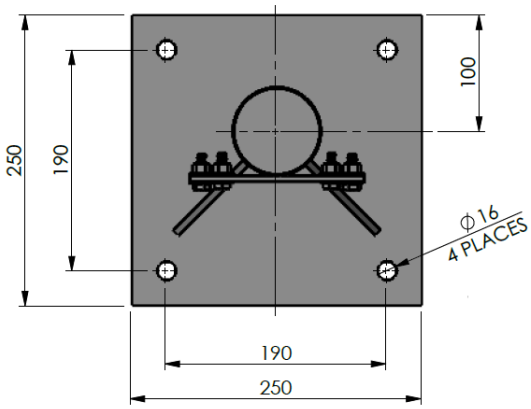

Part Number	Description
HRSTAND	Hose Reel Stand with Universal Mounting Plate - Galvanised Steel
HRSTAND-RED	Hose Reel Stand with Universal Mounting Plate - Painted Red

Product Code: FP06

Dixon
1300 134 651
customerservice@dixonvalve.com.au
dixonvalve.com.au