DATA SHEET

100mm Shouldered Butterfly Valve

The Right Connection®

Lever operated, corrosion-resistant stainless steel disk and shaft. Lever can be padlocked out in any of 11 positions. Nitrile Butadiene lining is molded to the body. Disc has a high-flow coefficient design which minimises flow resistance and cavitation.

Application
- Mining industry

Features
- Lever operated
- Epoxy coated cast iron body
- Graduated cap

Working Temperature
- -12°C to 82°C

Working Pressure
- 1.6 MPa
- 232 PSI

Body Material
- Body: SG Iron to ISO 1083; 400-250-15
- Lining: Nitrile Butadiene - 70 Duro hardness
- Disc: Cast SS grade DF8M to ASTMA351
- Handle: SG Iron ISO 1083; 400-250-15
- Shaft: Grade 316 Stainless steel

Key	Part	Material
1	Key	Carbon Steel
2	Top Stem	304SS
3	Gasket	304SS
4	Circlips	Spring Steel
5	Spilt Pad	304SS
6	Bushing	PTFE
7	Body	Cast Ductile Iron
8	IDML	Ductile Iron / NBR
9	Bottom Stem	304SS / 316SS / 416SS
10	Bolt	304SS

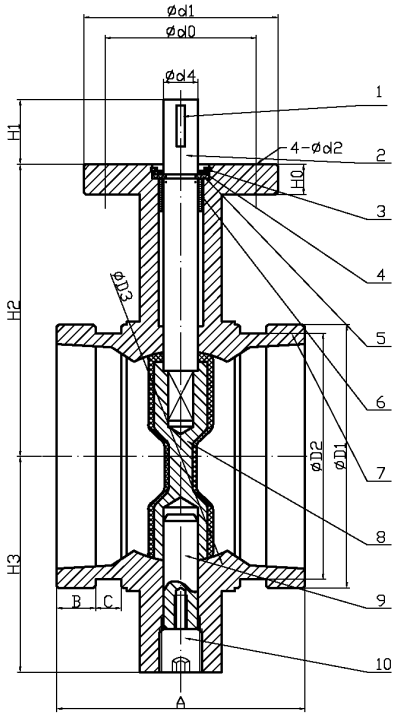

Part Number	Size	H0	H1	H2	H3	d0	d1	d2	d3	d4	Stem	A	B	C	øD1	øD2	øD3
BVD-S-1201-100	DN100	14	32	135.4	100	70	90	10	55.5	15.77	11 x 11	115	18	12	122	114	96.2

Product Group: AB02

Dixon
1300 134 651
customerservice@dixonvalve.com.au
dixonvalve.com.au

© 2021 APAC • TDS_Shouldered Butterfly_012022