DATA SHEET

200 PSI Stainless Steel Check Valve

The Right Connection®

WaterMark

Features
- Swing Type
- Screwed-In cap

Materials
- Investment Casting
- Stainless steel disc

Working Pressure:
- 200psi

Working Temperature:
- -20˚C to 160˚C

Connecting Threads
- BS21, BSPP

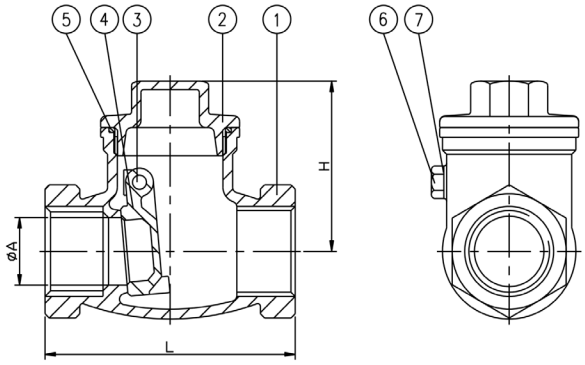

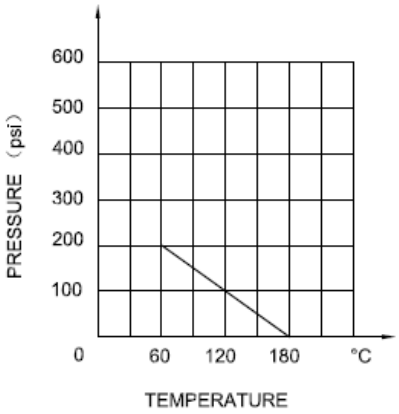

Material

Number	Parts Name	Specification	Quantity
1	Body	ASTM A-351 GR.CF8M	1
2	Cap	ATM A-351 GR.CF8M	1
3	Hanger Pin	SUS 316	1
4	Disc	ASTM A-351 GR.CF8M	1
5	Gasket Packing	Teflon	1
6	Plug	SUS 316	1
7	Plug Packing	Teflon	1

Dimensions

Part Number	Size	A	H	L
SSC-015	1/2"	15 mm	42 mm	65 mm
SSC-020	3/4"	20 mm	46 mm	75 mm
SSC-025	1"	25 mm	54 mm	90 mm
SSC-032	1 1/4"	32 mm	58 mm	105 mm
SSC-040	1 1/2"	40 mm	66 mm	120 mm
SSC-050	2"	50 mm	74 mm	140 mm
SSC-065	2 1/2"	65 mm	89 mm	165 mm
SSC-080	3"	80 mm	102 mm	185 mm

Product Group: VS02

Dixon
1300 134 651
customerservice@dixonvalve.com.au
dixonvalve.com.au