DATA SHEET

Manually-Operated TTMA Detent Wet-R-Dri Valve

The Right Connection®

TTMA Flanged Butterfly Valve

The Dixon Wet-R-Dri valve is a lightweight and compact quarter turn, in-line-stop valve. This easily maintained and versatile valve is widely used for liquid, gaseous or dry products and is available in a variety of sizes. The manual detent model provides a positive stop in the open and closed position, as well as a detent spring and ball which assists in holding the disc in the open or closed position.

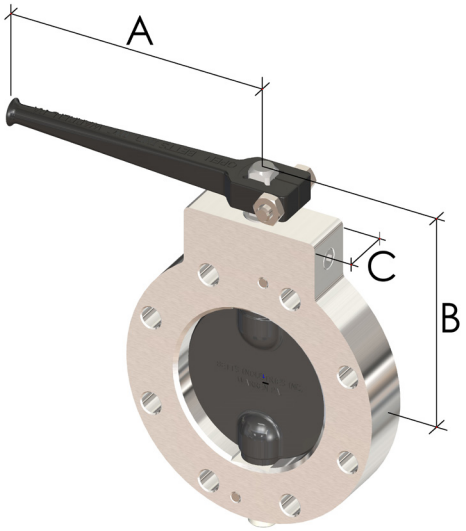

Features

- The Wet-R-Dri valve may be mounted in any position with handle located for easy operation
- Standard right-hand operation opens by turning handle quarter turn counter clockwise and left-hand operation
- Clockwise opening is available for valve with suffix "032"
- Gasoline and diesel up to E100, and B100 biofuel compatible
- Disc seal and shaft o-rings are available in a variety of materials to optimise chemical resistance and service temperature range
- Bolt pattern matches TTMA piping flange dimensions

Materials

- Body: aluminium, cast iron, or stainless steel-lined
- Disc: FKM B coated

Installation

- Care should be taken when mounting valve to ensure the inside dimension of adjoining flanges or pipe is large enough to allow the disc of the valve to open freely
- It is recommended to use Dixon flanges or adapters

Dimensions								Part #
Size	A mm	B mm	C mm	OD mm	ID mm	PCD mm	Holes mm	
3"	171.5	117.5	28.6	142.9	85.7	123.8	8	WD301ALVB
4"	171.5	130.2	28.6	168.3	111.1	149.2	8	WD401ALVB

Detent Valve Specifications

Size	Weight	Max Working Pressure		Temperature Range
INCHES	KG	PSI	BAR	°C
3”	1.54	75	5.2	-17 to 200
4”	2.0	75	5.2	-17 to 200

Dixon
1300 134 651
customerservice@dixonvalve.com.au
dixonvalve.com.au

© 2020 APAC • TDS_DETENT_May2020