DATA SHEET

Qld Combination Tank Suction Assemblies

The Right Connection®

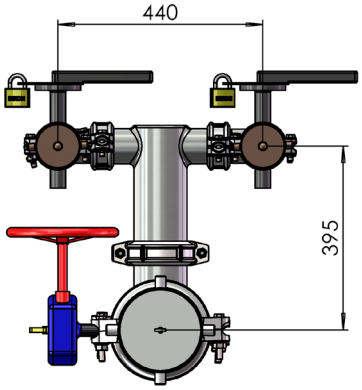

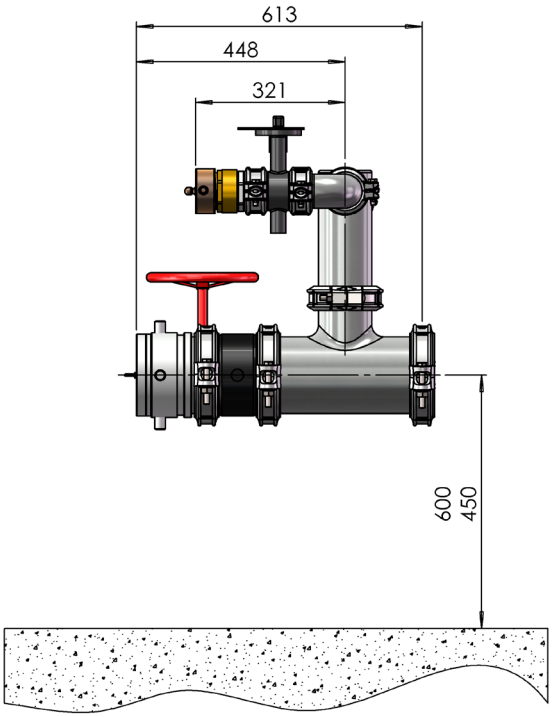

Features

- Combined small and large bore suction connections
- Dual 65NB QRT male connection points
- Single 125NB 3TPI female connection
- Hot dip galvanised manifold
- UL/FM 150NB gear operated, monitored butterfly valve

Approvals

- Designed to AS2419.1

Installation:

- To be installed in accordance with AS2419.1
- Minimum large bore outlet height 450mm, maximum 600mm FGL

Description	Part #
QLD rear entry tank suction assembly c/w 125COV and 2x 65QRT	FFS-TSA-QLD-RE

Dixon
1300 134 651
customerservice@dixonvalve.com.au
dixonvalve.com

DATA SHEET

Qld Combination Tank Suction Assemblies

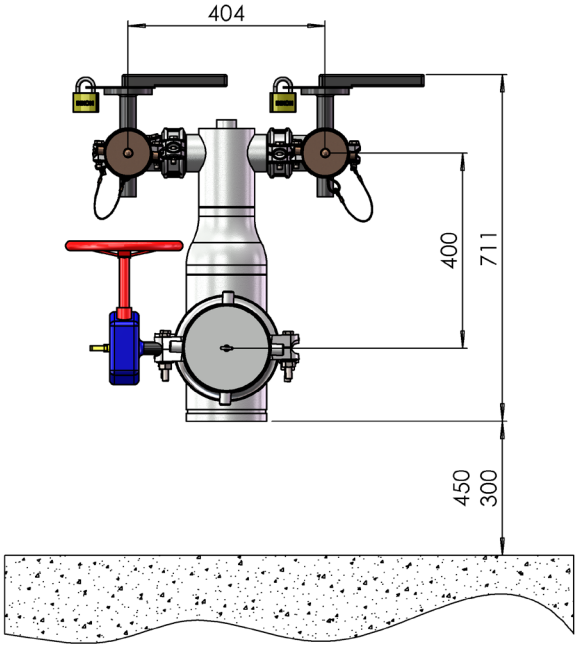

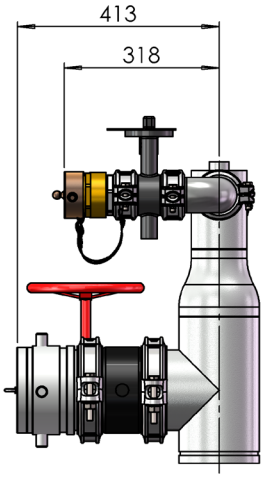

Features:
- Combined small and large bore suction connections
- Dual 65NB QRT male connection points
- Single 125NB 3TPI female connection
- Hot dip galvanised manifold
- UL/FM 150NB gear operated, monitored butterfly valve
- 150NB inlet connection
- 400mm from centre large bore to centre small bore suction points

Approvals:
- Designed to AS2419.1

Installation:
- To be installed in accordance with AS2419.1
- Minimum large bore outlet height 450mm, maximum 600mm FGL

Description	Part #
QLD bottom entry tank suction assembly c/w 125COV and 2x 65QRT	FFS-TSA-QLD-BE

Dixon
1300 134 651
customerservice@dixonvalve.com.au
dixonvalve.com